Straightaway 1000S

Top hung sliding hardware for steel framed doors up to 1000kg.

Features

- Quality ball-bearing hangers
- Primed or galvanised track

Specifications

Max door mass: 1000kg
Max door height: 5000mm
Max door width: 4000mm
Door thickness: Min 65mm
FOR EXPOSED DOORS,
CONSIDER WIND PRESSURE.
Max door surface area: 20 sq.m.

The area of a single sliding leaf should be related to all other factors.

Components

- A1000S Side fixing or R1000 top fixing brackets – max 900mm centres
- 1000RO Steel or 1000G galvanised top track
- 1000M Adjustable hangers
- 48/27B Guides
- 27S Steel guide channel with lugs
- 49 Door stop
- 210 Grab handle
- 1S Drop bolt

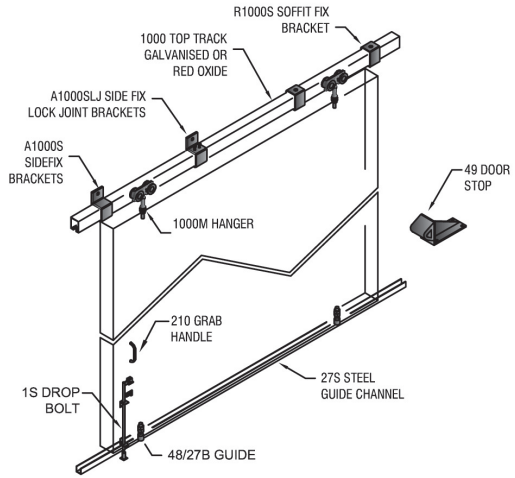

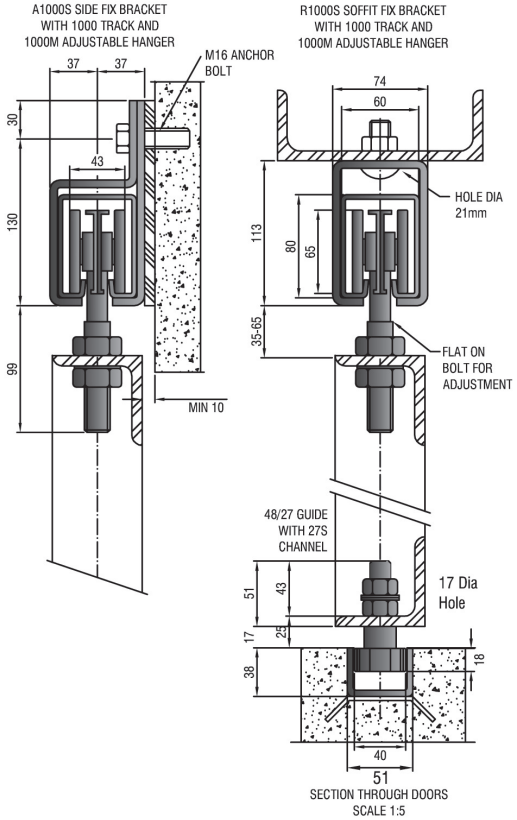

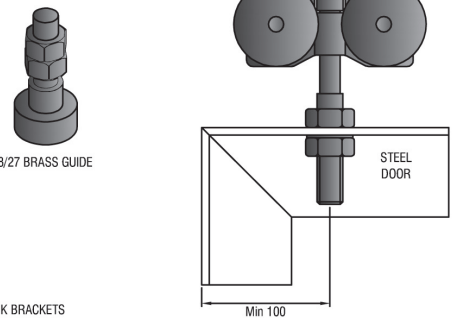

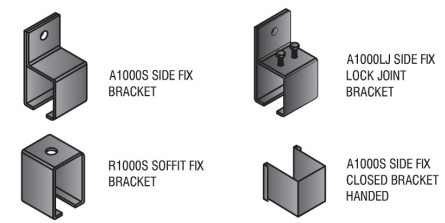

Mechanism

T			IND					ST 21.0

For specialist projects contact:
Hillaldam SLIDING DOOR SYSTEMS
South Africa: +27 11 626 1001
www.hillaldam.com

Straight sliding door systems
(Domestic, Commercial, Shop fitting, Hospital, Industrial)